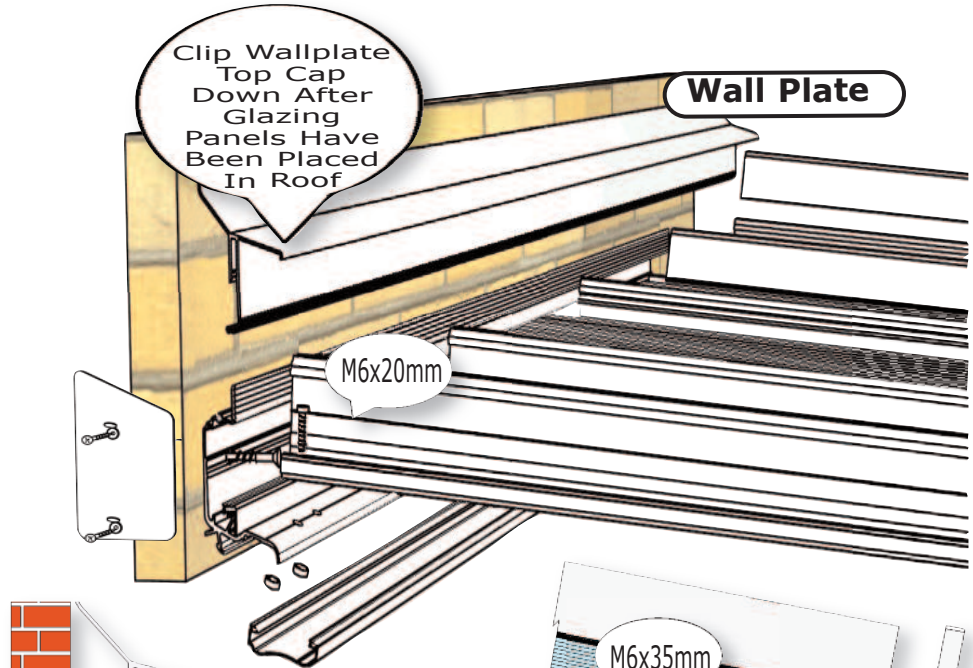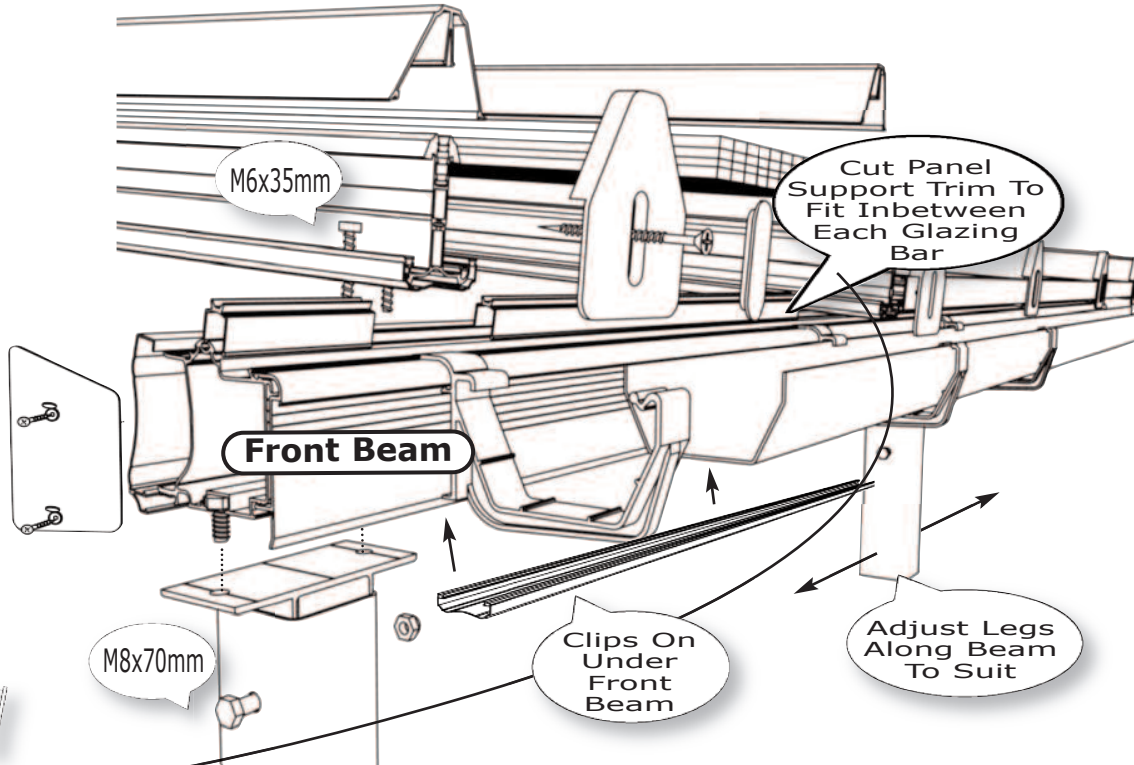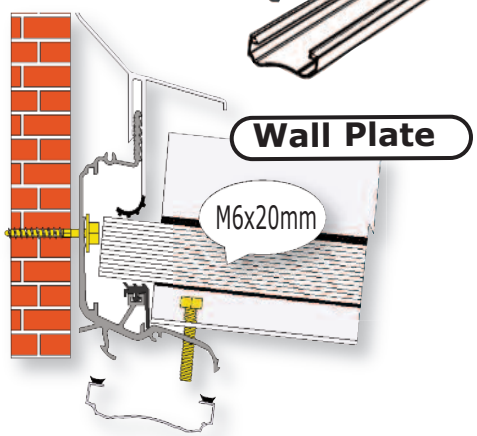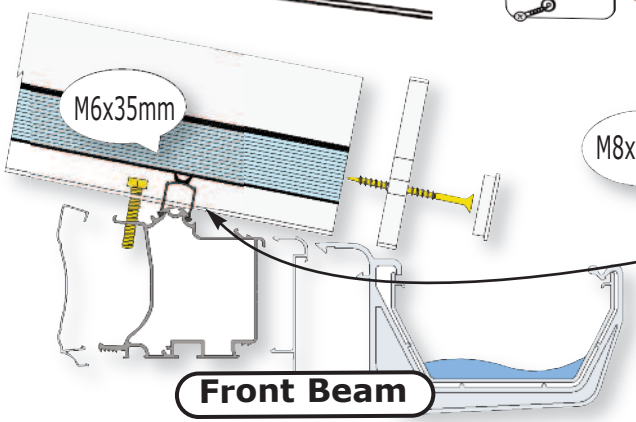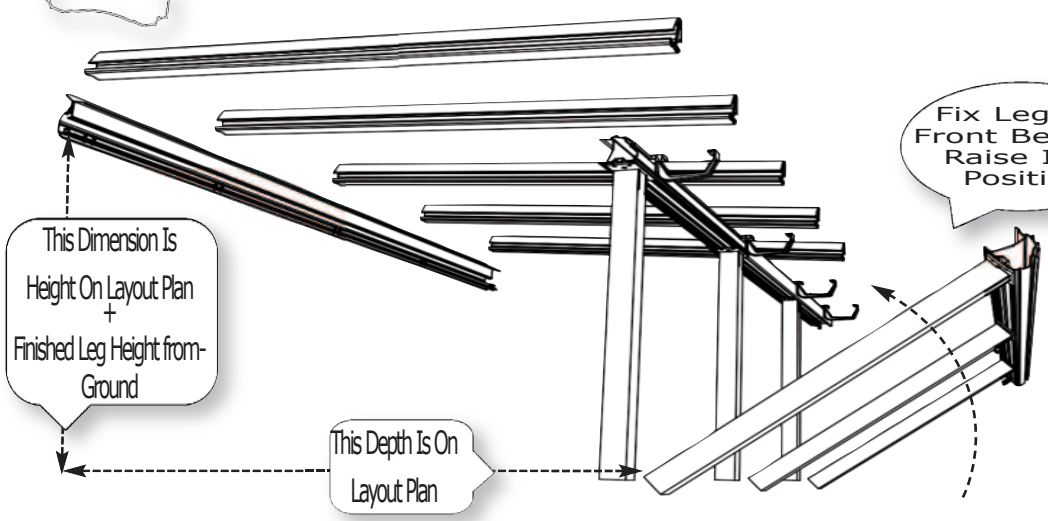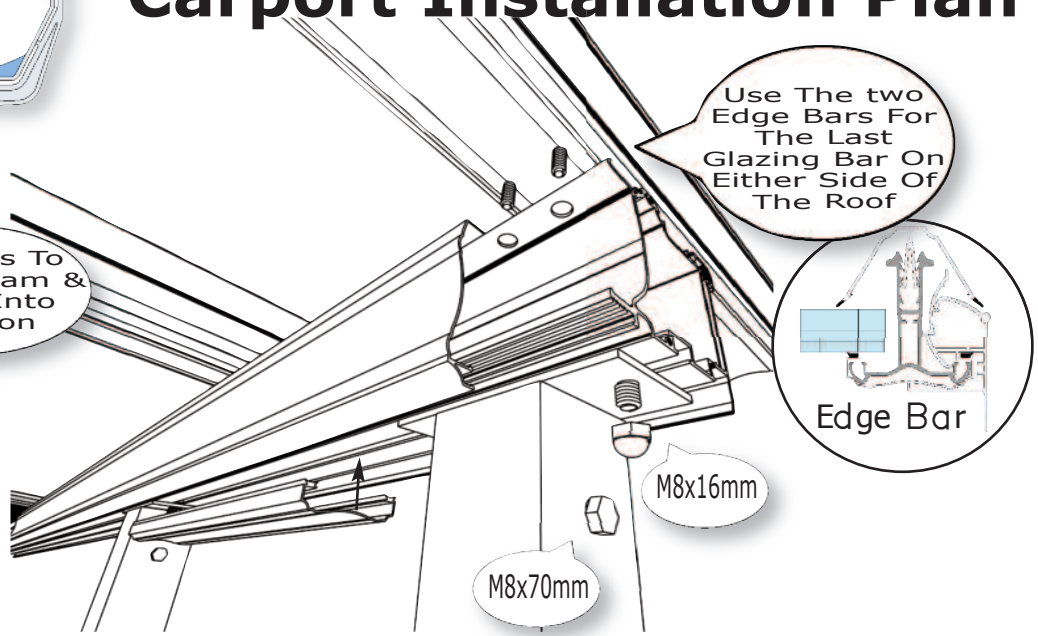Carport Installation Plan